Polymer Supply and Exhaust Valves
RPVB

Waterloo

Introduction
The Waterloo Aircell RPV air valves are an attractive and versatile form of air terminal for use as either a side wall grille or ceiling diffuser in supply or extract applications. Moulded in ABS engineering polymer to achieve a high quality finish, the units are available in 100mm or 125mm diameter neck sizes and can be supplied with optional pre-set flow regulators.

The RPV valve comprises a flanged frame with either a plain or perforated snap-fit fascia. The perforated fascia can be configured to give either horizontal diffusion or a projection jet using a concealed deflection pad. Both fascia types are fitted with a removable internal baffle to limit the jet spread angle when wall mounted or when ceiling mounted close to a wall. This internal baffle may be simply snapped off to give 360° jet spread.

The optional air flow regulators (AR) are designed to push fit into the frame to control air in either supply or extract mode and are available in three flow settings for each size. The units maintain a constant flow over a pressure range of 50-200 Pa.

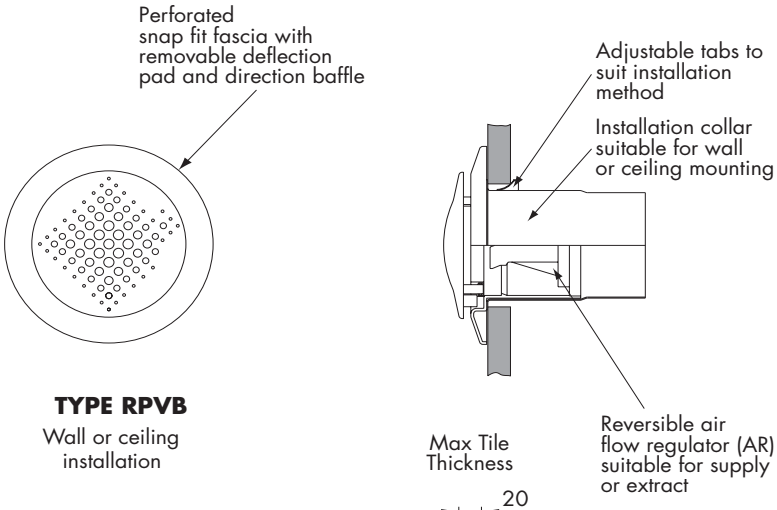

TYPE RPVB
Wall or ceiling installation

Product Description
RPVB Wall or ceiling application - perforated fascia
AR121 12 l/s regulator for ø100
AR171 17 l/s regulator for ø100
AR251 25 l/s regulator for ø100
AR175 17 l/s regulator for ø125
AR255 25 l/s regulator for ø125
AR335 33 l/s regulator for ø125
DC1 Installation collar for ø100
DC5 Installation collar for ø125

Installation
RPV valves simply push fit into circular ducting or optional installation collar when using flexible ducting. Suitable for mounting in wall or ceiling tiles.

Finishes
White - standard
All others subject to minimum order quantity

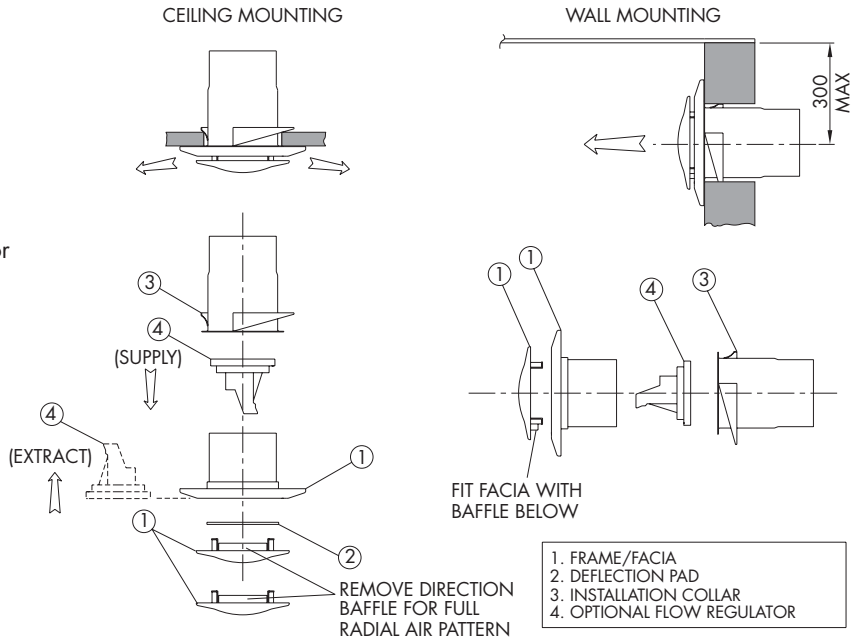

Order Example

RPVB125/AR335/DC5/White
Type
Size
Regulator (if required)
Installation Collar
Colour

	øA	øD	L1	L2
RPV100	110	97	140	85
RPV125	135	122	150	85

Polymer Supply and Exhaust Valves
RPVB

Selection Criteria

Throw data is presented in table 1 for ceiling and wall installations and is based on isothermal conditions to a terminal air velocity of 0.25m/s.

The ceiling installation data is for a partial radial pattern with the internal baffle fitted and the fascia in a lowered position. Removing the baffle produces a full radial pattern and reduces the throws by a factor of 0.85.

Data for wall installations is based on a confined jet and assumes that the valve is mounted within 300mm of the ceiling.

Static pressure loss data presented in tables 1 & 2 is valid for wall or ceiling valve configurations and is based on units fitted with the internal baffle. Removal of the baffle reduces the pressure loss by a factor of 0.65.

Noise data is shown in terms of sound power based NR levels (NRlw). Corrections factors should be applied as appropriate to the installation conditions to obtain the average sound pressure based NR level. The data is based on units fitted with the internal baffle.

Selection Example RPVB/125

Air Volume 25 l/s
Throw ceiling 5.5 m, wall 5.6m
Ps pressure drop 16 Pa
NRlw <20

Performance Tables

Table 1: Supply Air Valve Data - Ceiling and Wall Installation

RPVB		Air Volume						
	m^3/h	36	54	72	90	108	126	144
	l/s	10	15	20	25	30	35	40
RPVB 100 Dia	Throw (m) ceiling	3.6	4.7	5.7				
	Throw (m) wall	3.3	4.1	4.7				
	Ps	2	4	8				
	Lw	-	-	-				
RPVB 125 Dia	Throw (m) ceiling			5.0	5.5	6.0	6.2	6.6
	Throw (m) wall			4.9	5.6	6.2	6.9	7.5
	Ps			10	16	24	33	43
	Lw			-	-	20	26	32

Table 2 : Extract Air Valve Data

RPVB		Air Volume						
	m^3/h	36	54	72	90	108	126	144
	l/s	10	15	20	25	30	35	40
RPVB 100 Dia	Ps	3	5	10				
	Lw	-	-	-				
RPVB 125 Dia	Ps			13	21	31	43	56
	Lw			-	20	26	32	38

Table 3 : Air Regulator Acoustic Data at 50 Pa - Supply and Extract

RPVB		Air Volume			
	m^3/h	43	61	90	119
	l/s	12	17	25	33
RPVB 100 Dia	Supply	40	47	53	
	Extract	25	31	40	
RPVB 125 Dia	Supply		36	37	38
	Extract		22	27	32